Features

- 3.3V/5V dual-supply voltages
- Low power consumption
- High speed: 10 MBd typical
- TTL/LVTTL/LVCMOS compatible
- Low input current capability: 5 mA
- Guaranteed AC and DC performance over temperature: –40°C to +85°C
- Strobable output (single-channel products only)
- Safety approvals: UL、VDE、CQC

Applications

- Isolated line receiver
- Computer-peripheral interfaces
- Microprocessor system interfaces
- Digital isolation for A/D, D/A conversion
- Switching power supply
- Instrument input/output isolation
- Ground loop elimination

Description

ICPL-0630/0631 are optically coupled gates that combine a GaAsP light-emitting diode and an integrated high gain photo detector. An enable input allows the detector to be strobed. The output of the detector IC is an open collector Schottky-clamped transistor. The internal shield provides a guaranteed common mode transient immunity specification of 10 kV/μs at 3.3V. This unique design provides maximum AC and DC circuit isolation while achieving LVTTL/LVCMOS compatibility. The optocoupler AC and DC operational parameters are guaranteed from –40°C to +85°C allowing trouble-free system performance.

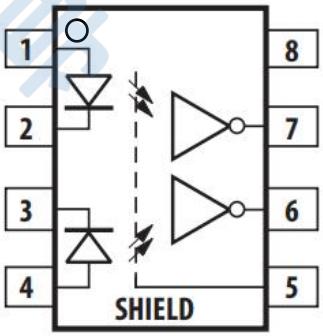

Truth table

Input	Output
H	L
L	H

ORDERING INFORMATION

Outline	Part Number	Package	Marking	Packing	Packing Size	Quantity
	ICPL-0630-500E	SOP8	ICPL 063X /YYWW B	Reel	13 "	2000
	ICPL-0631-500E					

© ISOMICRON. 2023. All rights reserved

CONTENTS

Pin Configuration And Functions. 3
Absolute Maximum Ratings. 3
Recommended Operation Conditions. 4
Electrical Optical Characteristics. 4
Characteristic Curves. 6
Test Circuits. 8
Package Dimensions. 10
Recommended Solder Mask. 10
Taping Dimensions 11
Ordering And Marking Information 12
Reflow Information 13
Temperature Profile Of Soldering. 14
Disclaimer 15

ISOMICRON 安芯微半导体

© ISOMICRON. 2023. All rights reserved

PIN CONFIGURATION AND FUNCTIONS

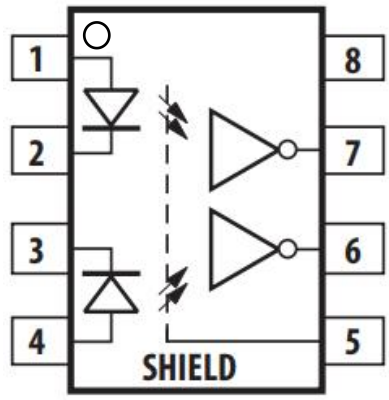

Pin	Name
1	Anode
2	Cathode
3	Cathode
4	Anode
5	GND
6	V_{O2}
7	V_{O1}
8	V_{CC}

ABSOLUTE MAXIMUM RATINGS

Parameter	Symbol	Value	Unit	Note
INPUT				
Forward Current	I_F	15	mA	
Peak Forward Current	I_{FP}	50	mA	1
Peak Transient Current	$I_{F(trans)}$	1	A	2
Reverse Voltage	V_R	5	V	
Enable Voltage	V_E	V_{CC}+0.5	V	
Input Power Dissipation	P_I	27	mW	
OUTPUT				
Supply Voltage	V_{CC}	7	V	
Output Voltage	V_O	7	V	
Output Current	I_O	50	mA	
Output Power Dissipation	P_O	60	mW	
COMMON				
Isolation Voltage	V_{iso}	3750	Vrms	3
Operating Temperature	T_{opr}	-40~85	°C	
Storage Temperature	T_{stg}	-55~125	°C	
Soldering Temperature	T_{sol}	260	°C	4

Note 1. 50% duty, 1ms P.W
Note 2. ≤1μs P.W,300pps
Note 3. AC For 1 Minute, R.H. = 40 ~ 60%
Note 4. For 10 seconds

© ISOMICRON. 2023. All rights reserved

RECOMMENDED OPERATION CONDITIONS

Parameter	Symbol	Min.	Max.	Unit
Operating Temperature	T_a	-40	85	°C
Supply Voltage	V_{CC}	2.7	3.6	V
		4.5	5.5	V
Low Level Input Current	I_{FL}	0	250	μA
High Level Input Current	I_{FH}	5	15	mA
Low Level Enable Voltage	V_{EL}	0	0.8	V
High Level Enable Voltage	V_{EH}	2	VCC	V
Output Pull-up Resistor	R_L	330	4k	Ω
Fan Out (at RL=1kΩ per channel)	N	-	8	TTL Loads

ELECTRICAL OPTICAL CHARACTERISTICS (T_a=25°C)

Parameter	Symbol	Min.	Typ.	Max.	Unit	Test Condition
INPUT						
Forward Voltage	V_F	1.3	1.35	1.8	V	I_F=10mA
Reverse Current	I_R	-	-	10	μA	V_R=5V
Input Capacitance	C_{in}	-	60	-	pF	V=0, f=1MHz
OUTPUT						
High Level Supply Current	I_{CCH}	-	10	15	mA	I_F=0mA, V_E=0.5V,V_{CC}=5.5V
Low Level Supply Current	I_{CCL}	-	13	21	mA	I_F=10mA, V_{CC}=5.5V
TRANSFER CHARACTERISTICS (Ta=-40 to 85°C)						
High Level Output Current	I_{OH}	-	5.5	100	μA	V_{CC}=5.5V, V_O=5.5V, I_F=250μA, V_E=2.0V
Low Level Output Voltage	V_{OL}	-	0.35	0.6	V	V_{CC}=5.5V, I_F=5mA, V_E=2.0V, I_{CL}=13mA
Input Threshold Current	I_{FT}	-	3	5	mA	V_{CC}=5.5V, V_O=0.6V, V_E=2.0V, I_{OL}=13mA
Isolation Resistance	R_{iso}	10^12	10^14	-	Ω	DC500V, 40 ~ 60% R.H.
Floating Capacitance	C_{IO}	-	1.0	-	pF	V=0, f=1MHz

© ISOMICRON. 2023. All rights reserved

ELECTRICAL OPTICAL CHARACTERISTICS

Parameter		Symbol	Min.	Typ.	Max.	Unit	Test Condition
switching characteristics (T_a=-40 to 85°c, V_{cc}=5v, I_f=7.5ma unless specified otherwise)							
Propagation Delay Time to Output Low Level		t_{PHL}	-	50	75	ns	C_L=15pF, R_L=350Ω, T_a=25°C
Propagation Delay Time to Output High Level		t_{PLH}	-	48	75	ns	C_L=15pF, R_L=350Ω, T_a=25°C
Pulse Width Distortion		$\|t_{PHL}-t_{PLH}\|$	-	3.5	35	ns	C_L=15pF, R_L=350Ω
Rise Time		t_r	-	24	-	ns	C_L=15pF, R_L=350Ω
Fall Time		t_f	-	10	-	ns	C_L=15pF, R_L=350Ω
Common Mode Transient Immunity at Logic High	0630	CM_H	5000	-	-	V/μs	I_F=7.5mA , V_{OH}=2.0V, R_L=350Ω, T_a=25°C V_{CM}=50Vp-p
	0631		10000	-	-		I_F=7.5mA , V_{OH}=2.0V, R_L=350Ω, T_a=25°C V_{CM}=400Vp-p
Common Mode Transient Immunity at Logic Low	0630	CM_L	5000	-	-	V/μs	I_F=0mA , V_{OH}=0.8V, R_L=350Ω, T_a=25°C V_{CM}=50Vp-p
	0631		10000	-	-		I_F = 0mA , V_{OH}=0.8V, R_L=350Ω, T_a=25°C V_{CM}=400Vp-p

© ISOMICRON. 2023. All rights reserved

CHARACTERISTIC CURVES

Fig.1 Forward Current vs. Forward Voltage

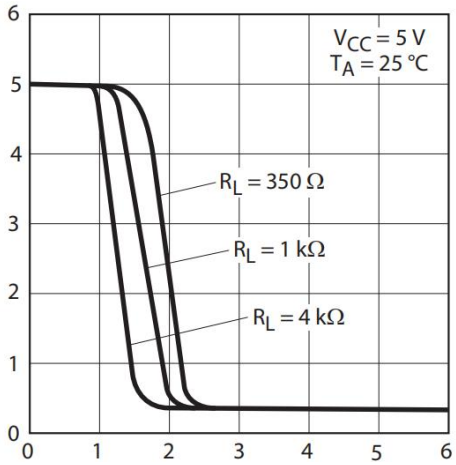

Fig.2 Input Threshold Current vs. Ambient Temperature

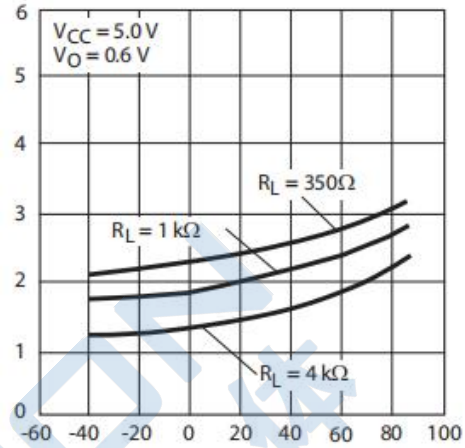

Fig.3 Low Level Output Current vs. Ambient Temperature

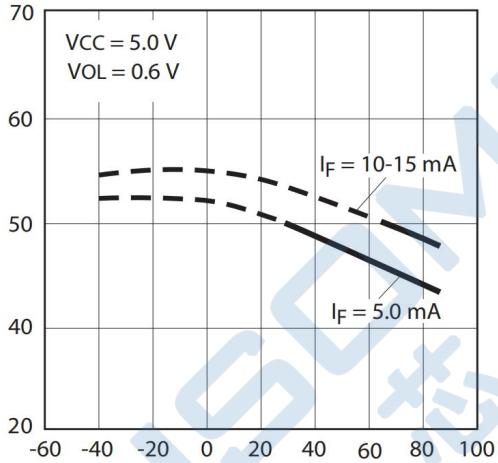

Fig.4 Low Level Output Voltage vs. Ambient Temperature

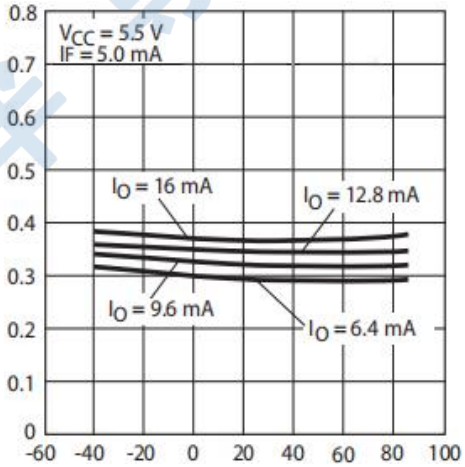

Fig.5 High Level Output Current vs. Ambient Temperature

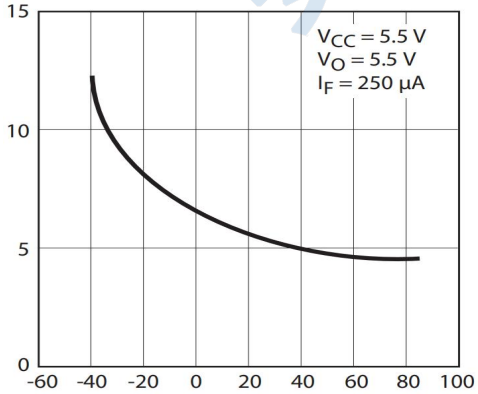

Fig.6 Output Voltage vs. Forward Current

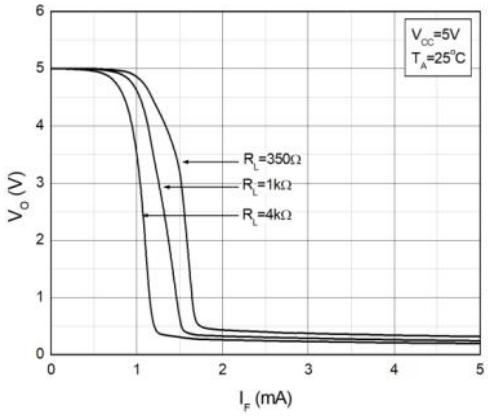

© ISOMICRON. 2023. All rights reserved

Fig.7 Propagation Delay vs. Forward Current

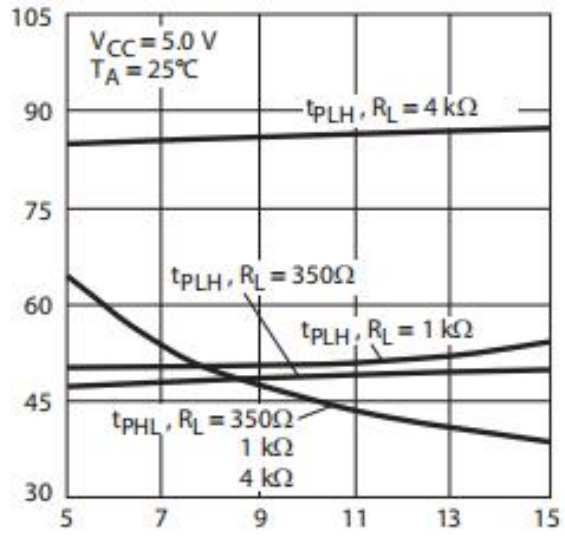

Fig.8 Rise and Fall Time vs. Ambient Temperature

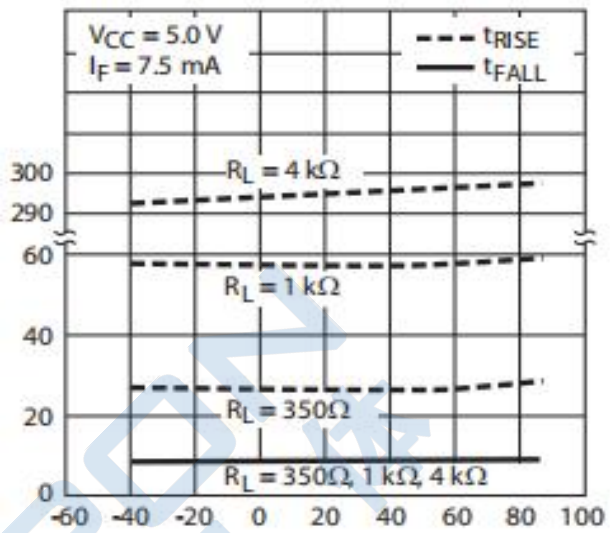

Fig.9 Propagation Delay vs. Ambient Temperature

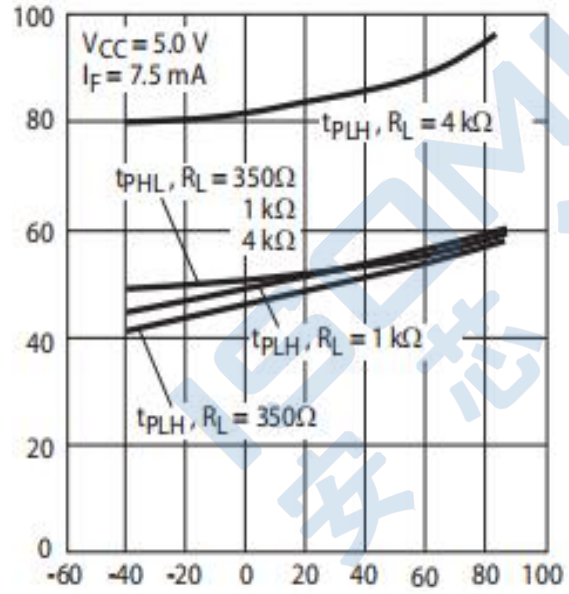

Fig.10 Propagation Delay vs. Ambient Temperature

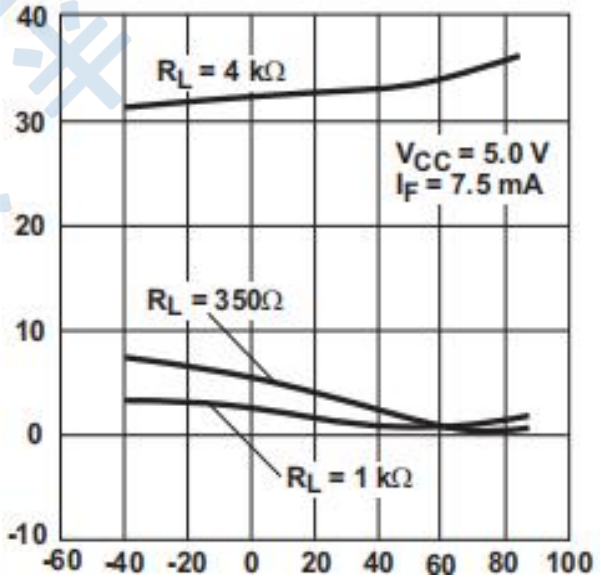

© ISOMICRON. 2023. All rights reserved

TEST CIRCUITS

Fig.11 Test Circuits for t_{PHL}, t_{PLH}, t_r, t_f

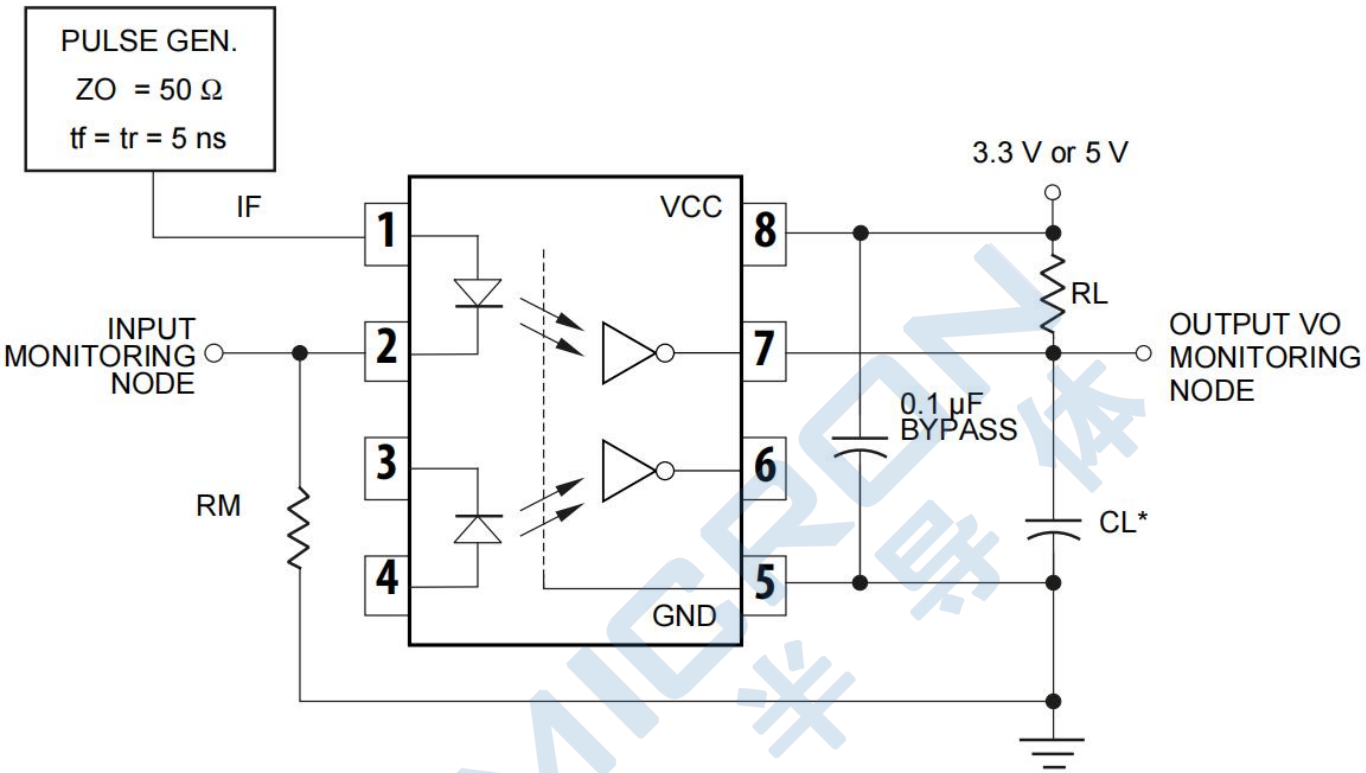

Fig.12 Waveforms of t_{PHL}, t_{PLH}, t_r, t_f

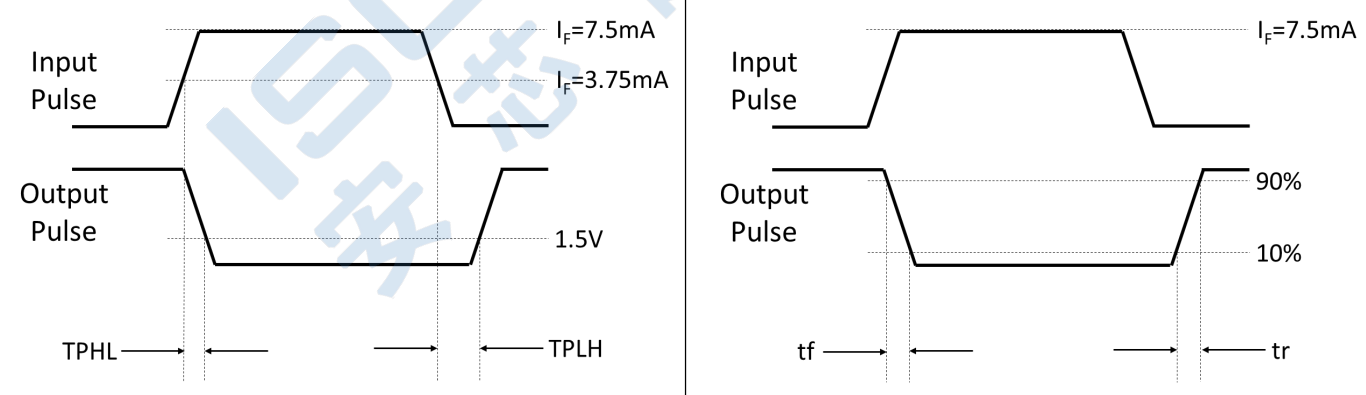

© ISOMICRON. 2023. All rights reserved

TEST CIRCUITS

Fig.15 Test Circuits for Common Mode Transient Immunity

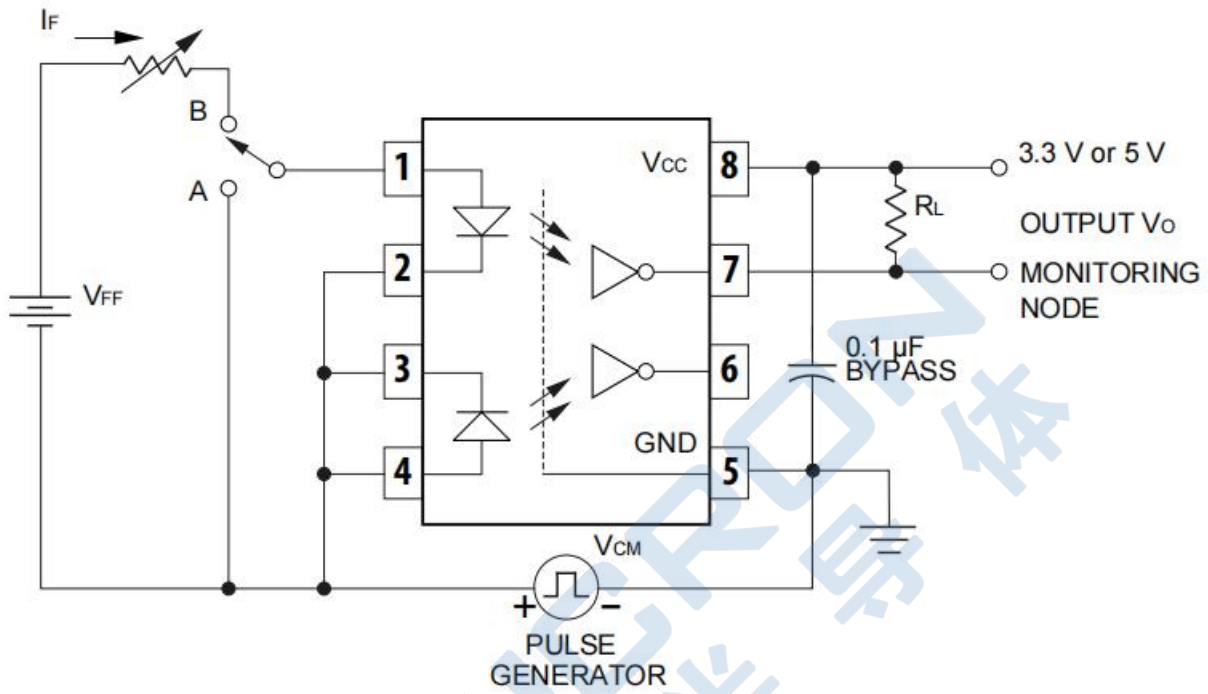

Fig.16 Waveforms of Common Mode Transient Immunity

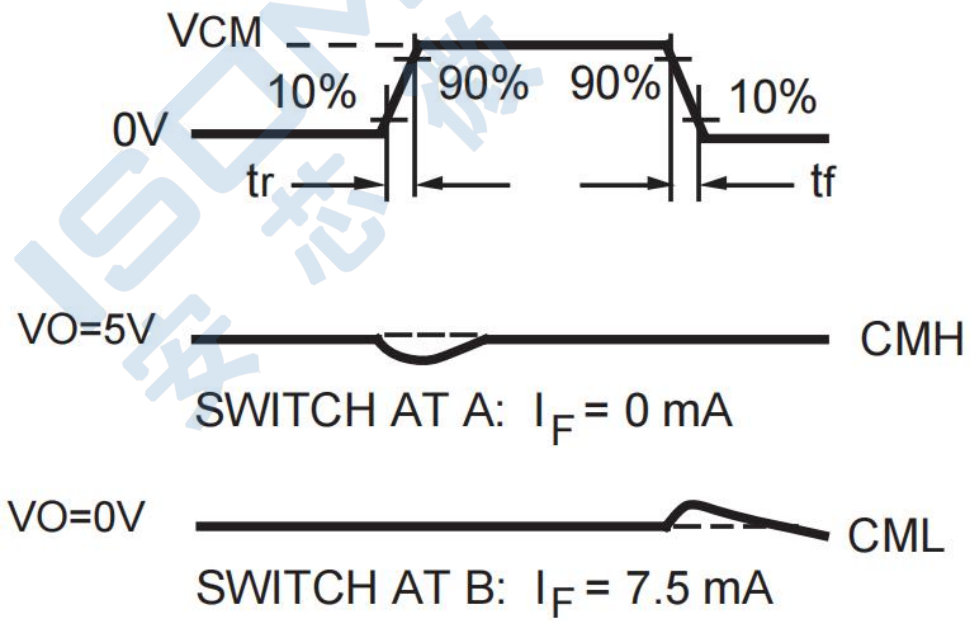

© ISOMICRON. 2023. All rights reserved

PACKAGE DIMENSIONS

Surface Mount (Low Profile) Lead Forming (SOP8)

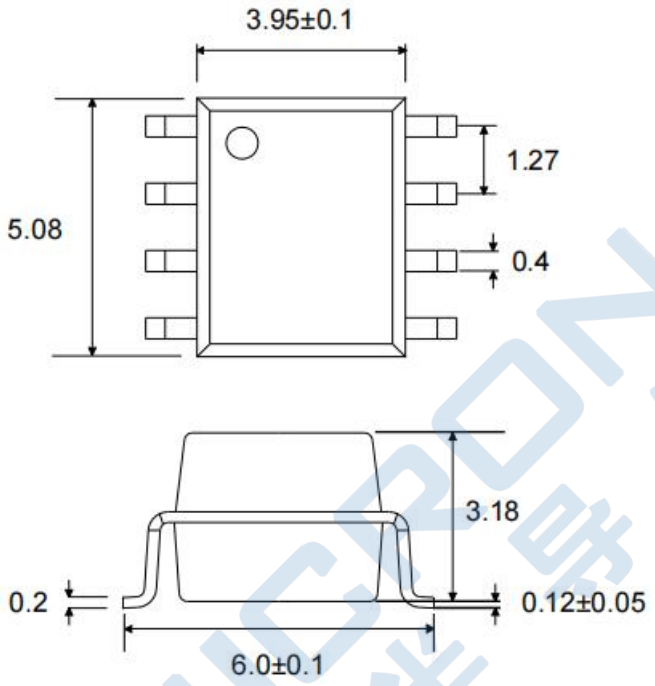

- **Dimensions in mm unless otherwise stated**

RECOMMENDED SOLDER MASK

Surface Mount (Low Profile) Lead Forming

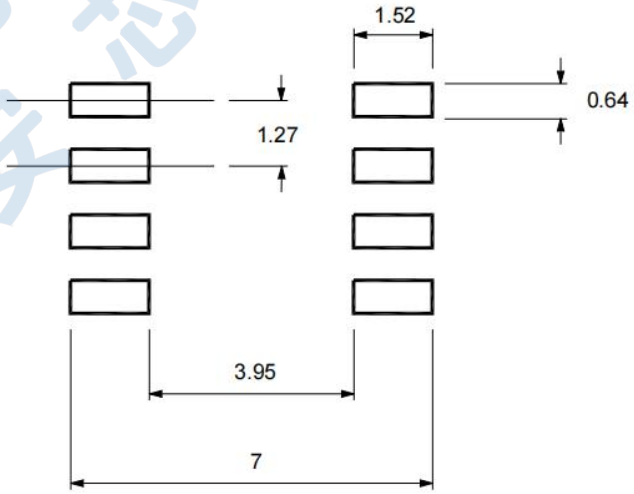

- **Dimensions in mm unless otherwise stated**

© ISOMICRON. 2023. All rights reserved

TAPING DIMENSIONS

Option SOP8

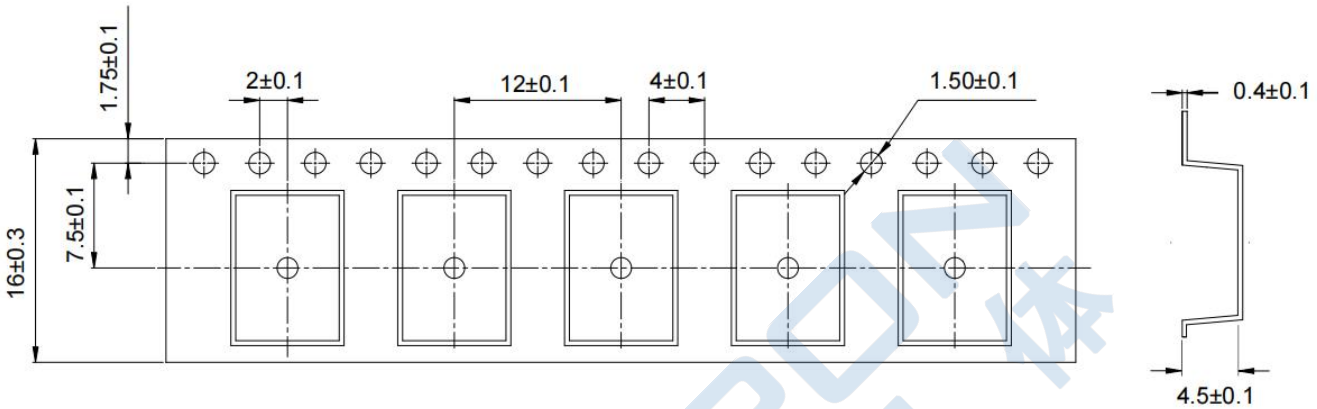

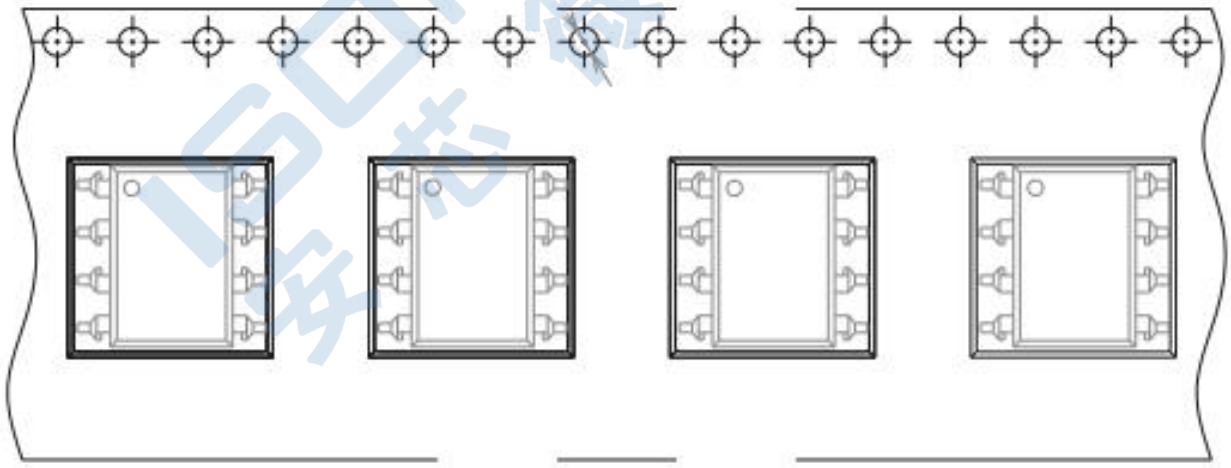

- **Dimensions in mm unless otherwise stated**

© ISOMICRON. 2023. All rights reserved

ORDERING AND MARKING INFORMATION

Marking Information

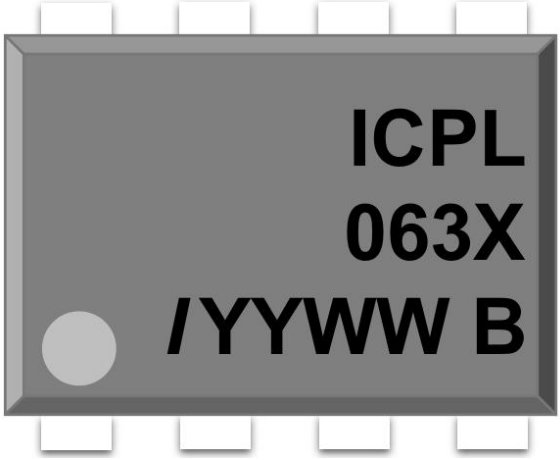

ICPL	:	Company Abbr.
063X	:	Part Number
/	:	ISOMICRON
YY	:	Fiscal Year
WW	:	Work Week
B	:	Manufacturing Code

Order Code

ICPL – 063X - 5 0 0 E

- **Company Abbr.** → ICPL
- **Part Number** → 063X
- **Lead Forming** → 5
  5: SM-SL
- **Performance** → 0
  0: Normal
  1: Enhanced
- **CTR Rank:** None → 0
- **Halogen Free** → E
  E: Halogen-free,Lead-free
  Z: Halogen, Lead-free

Packing Quantity

Option	Quantity	Quantity – Inner box	Quantity – Outer box
SM-SL	2000 Units/Reel	2 Reels/Inner box	5 Inner box/Outer box = 20k Units

© ISOMICRON. 2023. All rights reserved

REFLOW INFORMATION

Reflow Profile

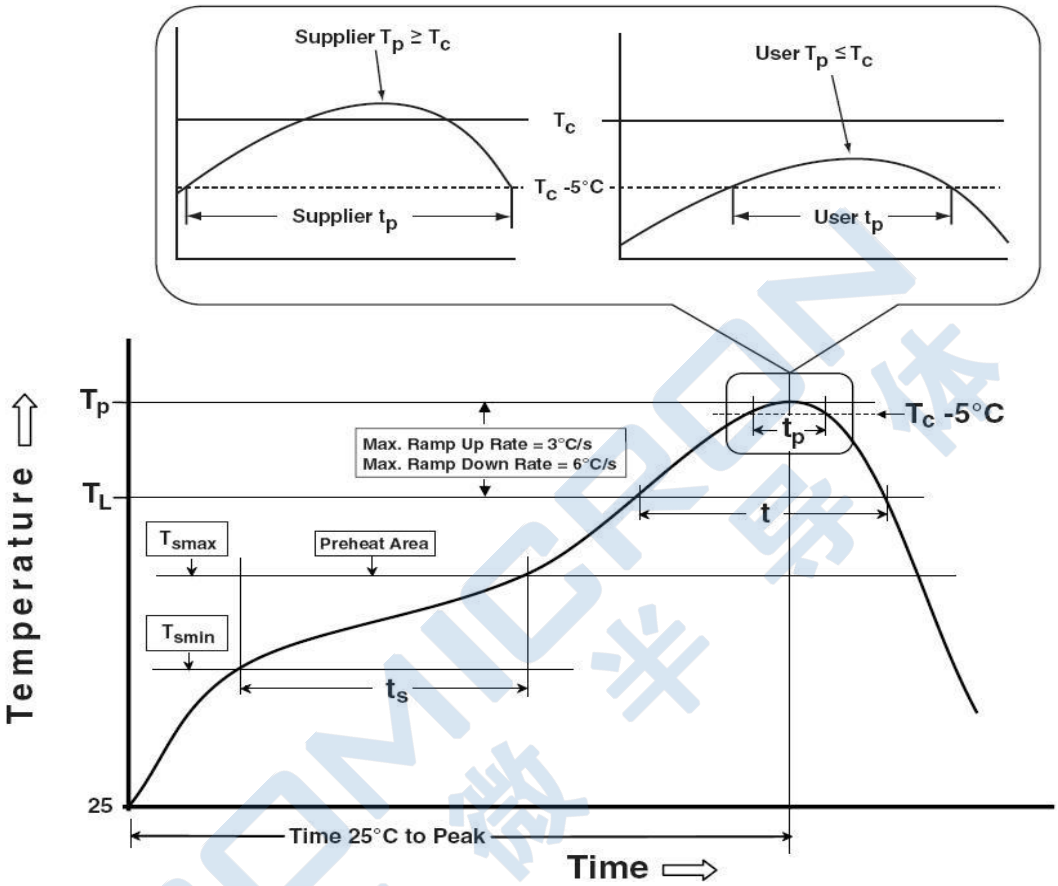

Profile Feature	Sn-Pb Assembly Profile	Pb-Free Assembly Profile
Temperature Min. (Tsmin)	100	150°C
Temperature Max. (Tsmax)	150	200°C
Time (ts) from (Tsmin to Tsmax)	60-120 seconds	60-120 seconds
Ramp-up Rate (tL to tP)	3°C/second max.	3°C/second max.
Liquidous Temperature (TL)	183°C	217°C
Time (tL) Maintained Above (TL)	60 – 150 seconds	60 – 150 seconds
Peak Body Package Temperature	235°C +0°C / -5°C	260°C +0°C / -5°C
Time (tP) within 5°C of 260°C	20 seconds	30 seconds
Ramp-down Rate (TP to TL)	6°C/second max	6°C/second max
Time 25°C to Peak Temperature	6 minutes max.	8 minutes max.

© ISOMICRON. 2023. All rights reserved

TEMPERATURE PROFILE OF SOLDERING

Wave Soldering (JESD22-A111 Compliant)

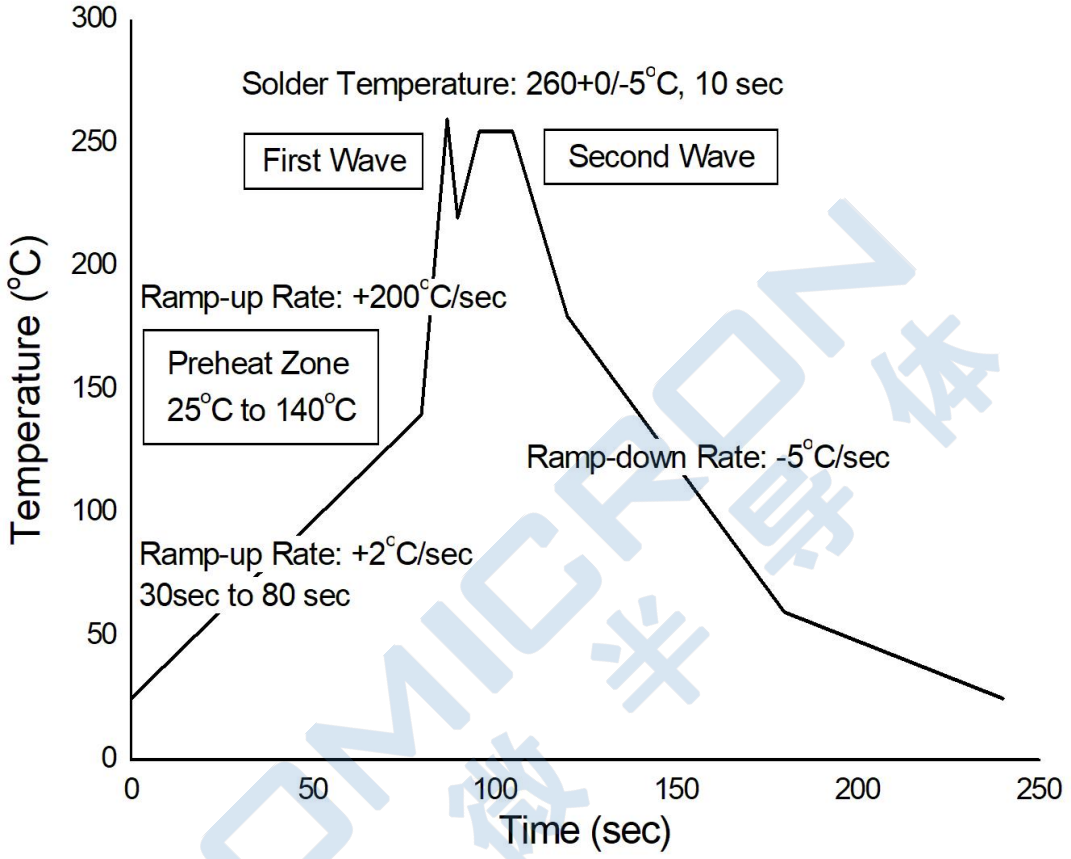

Hand Soldering By Soldering Iron	
Soldering Temperature	380+0/-5°C
Soldering Time	3 sec max.

- **One time soldering is recommended for all soldering method.**
- **Do not solder more than three times for IR reflow soldering.**

© ISOMICRON. 2023. All rights reserved

DISCLAIMER

- ISOMICRON is continually improving the quality, reliability, function and design. ISOMICRON reserves the right to make changes without further notices.
- The characteristic curves shown in this datasheet are representing typical performance which are not guaranteed.
- ISOMICRON makes no warranty, representation or guarantee regarding the suitability of the products for any particular purpose or the continuing production of any product. To the maximum extent permitted by applicable law, ISOMICRON disclaims (a) any and all liability arising out of the application or use of any product, (b) any and all liability, including without limitation special, consequential or incidental damages, and (c) any and all implied warranties, including warranties of fitness for particular
- The products shown in this publication are designed for the general use in electronic applications such as office automation, equipment, communications devices, audio/visual equipment, electrical application and instrumentation purpose, non-infringement and merchantability.
- This product is not intended to be used for military, aircraft, automotive, medical, life sustaining or lifesaving applications or any other application which can result in human injury or death.
- Please contact ISOMICRON sales agent for special application request.
- Immerge unit's body in solder paste is not recommended.
- Parameters provided in datasheets may vary in different applications and performance may vary over time. All operating parameters, including typical parameters, must be validated in each customer application by the customer's technical experts. Product specifications do not expand or otherwise modify ISOMICRON's terms and conditions of purchase, including but not limited to the warranty expressed therein.
- Discoloration might be occurred on the package surface after soldering, reflow or long-time use. It neither impacts the performance nor reliability.

© ISOMICRON. 2023. All rights reserved